VIPACK FURNITURE

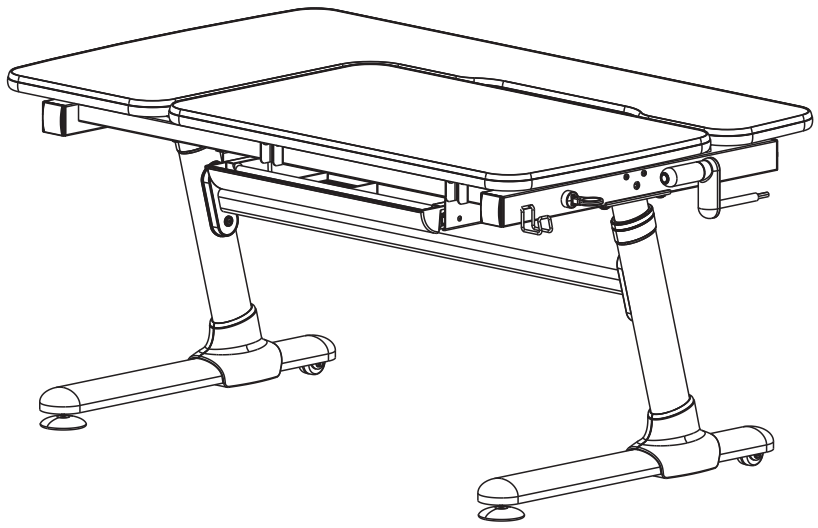

CLBU50215

ASSEMBLY INSTRUCTIONS

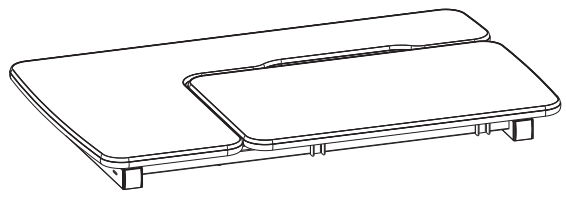

B1

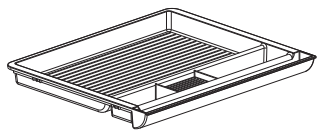

B2

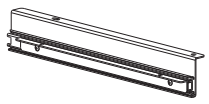

B3

B4

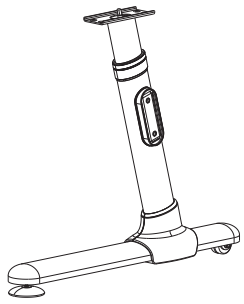

B5

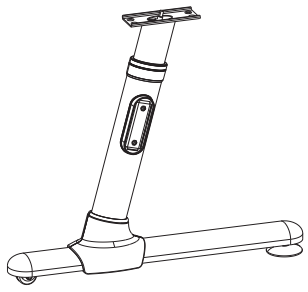

B6

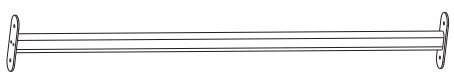

B7

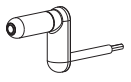

B8

A1x4

A2x4

A3x4

A4x4

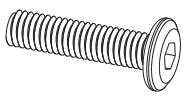

A5x8

A6x8

A7x1

A8x1

1

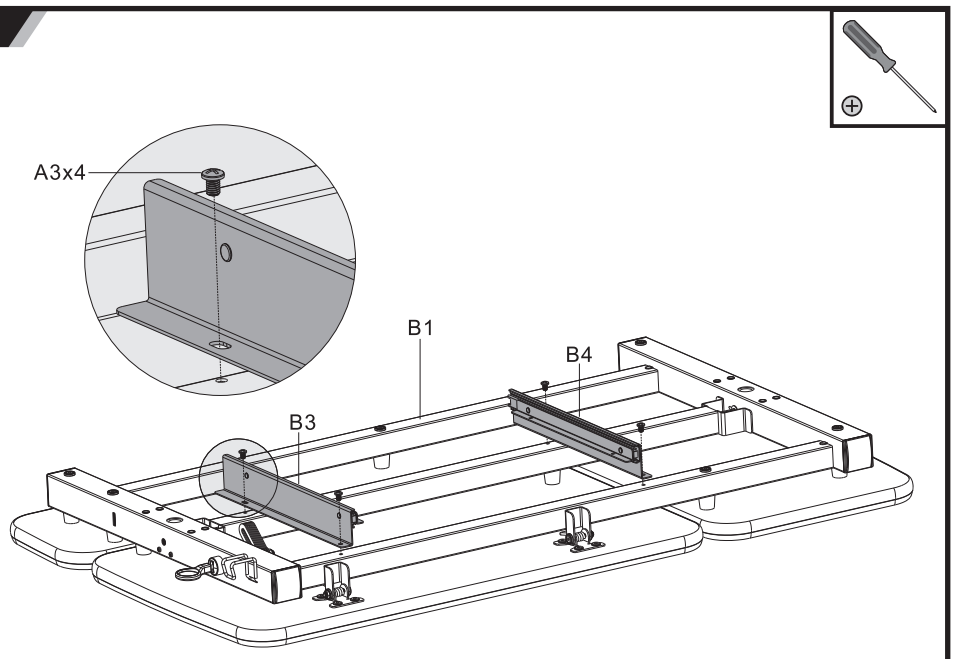

2

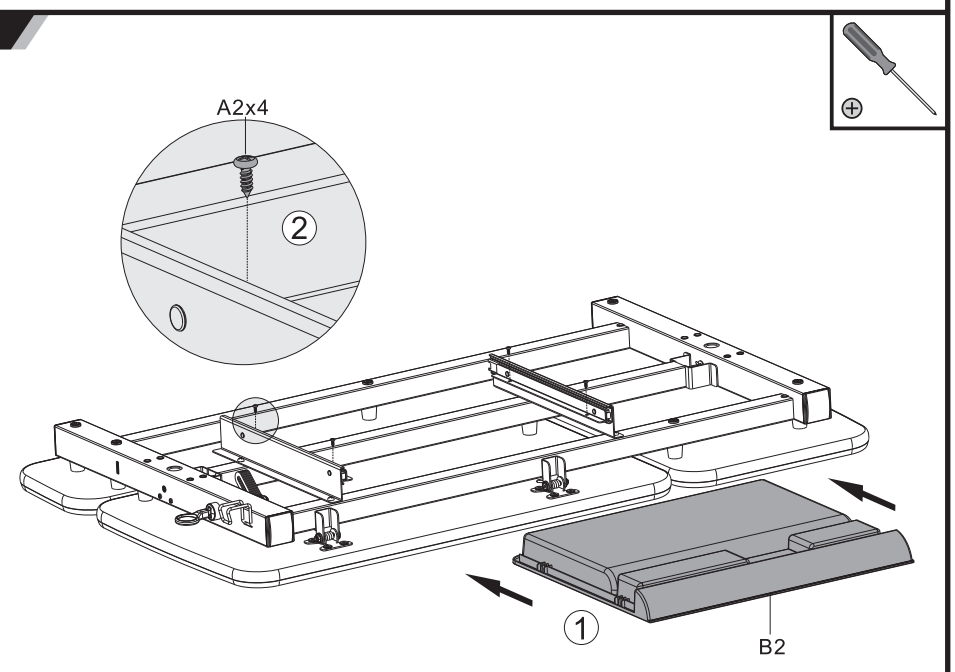

3

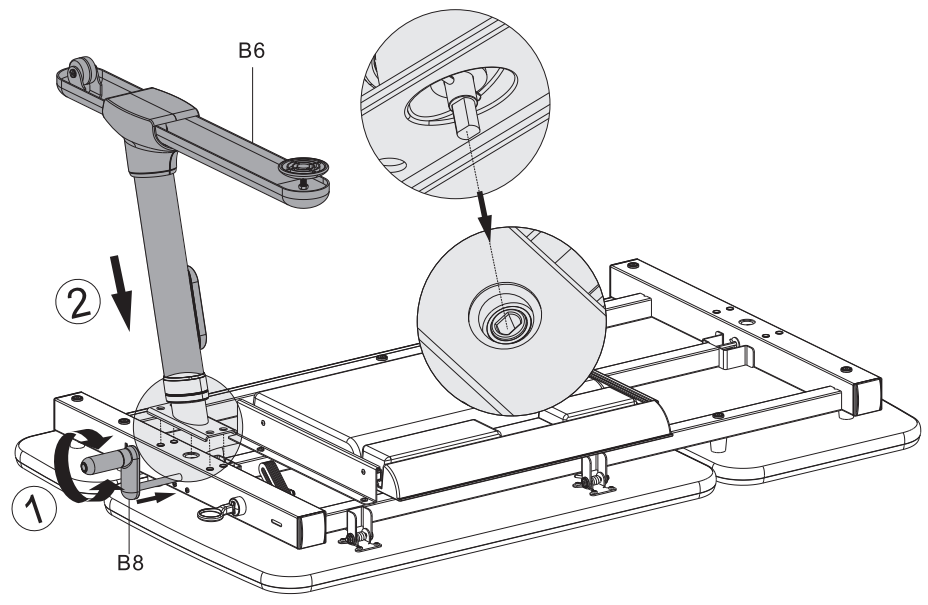

4

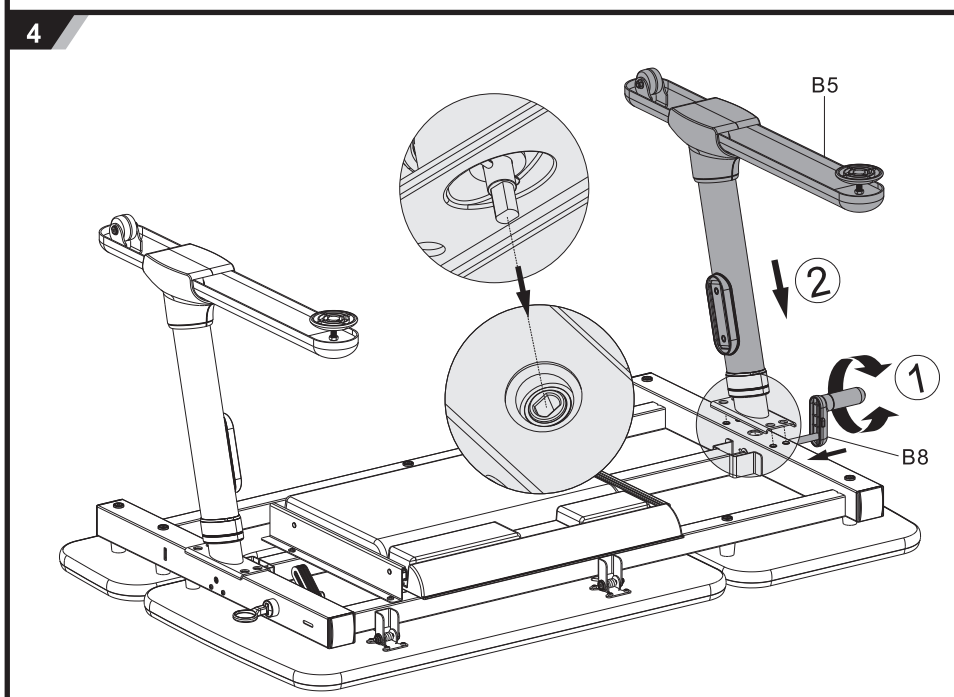

5

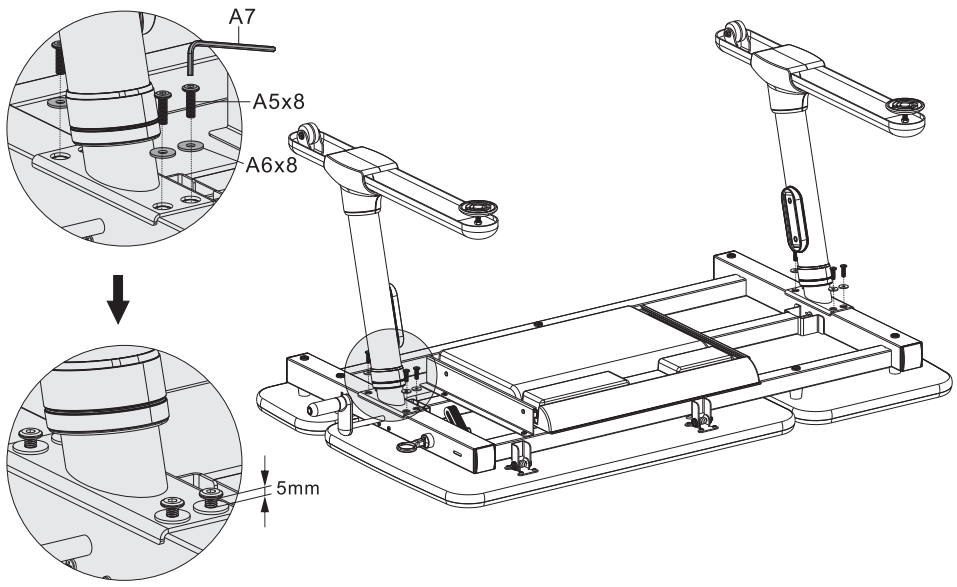

6

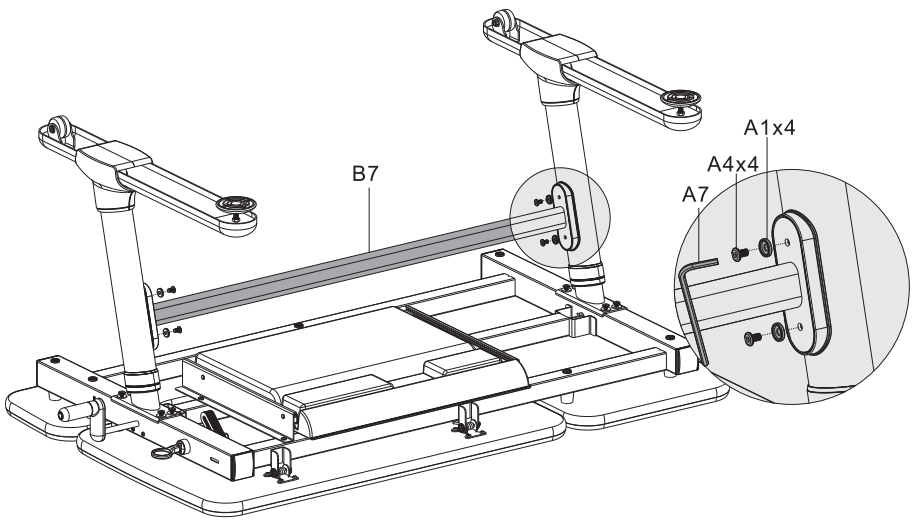

7

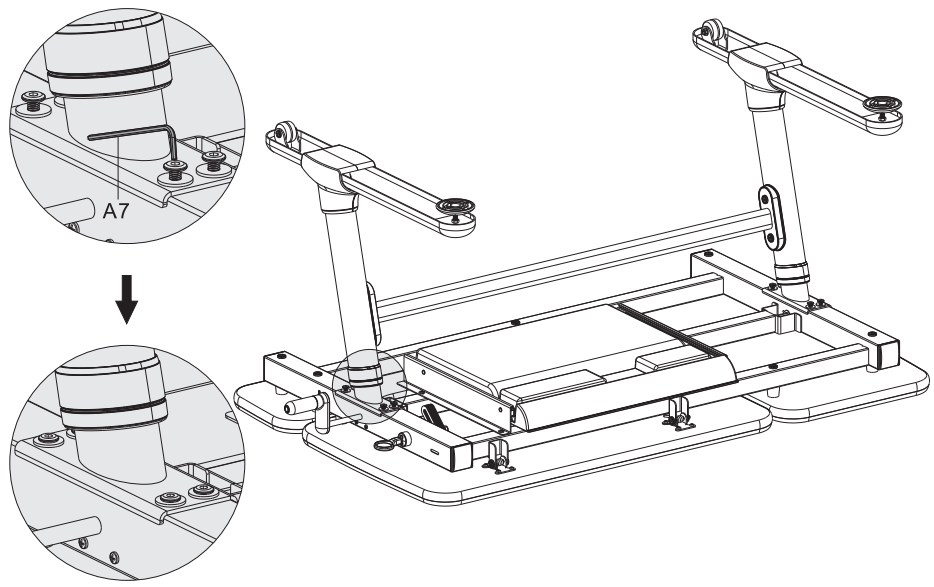

8

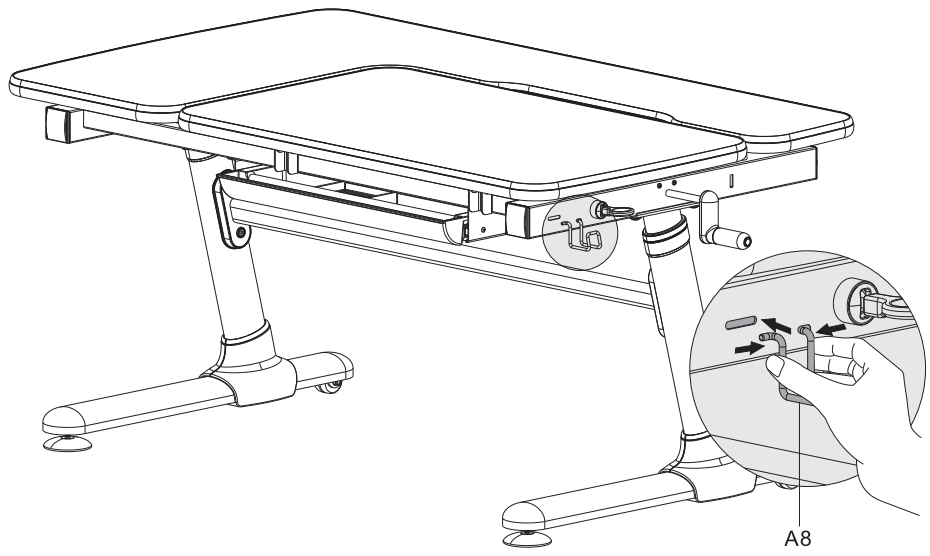

9

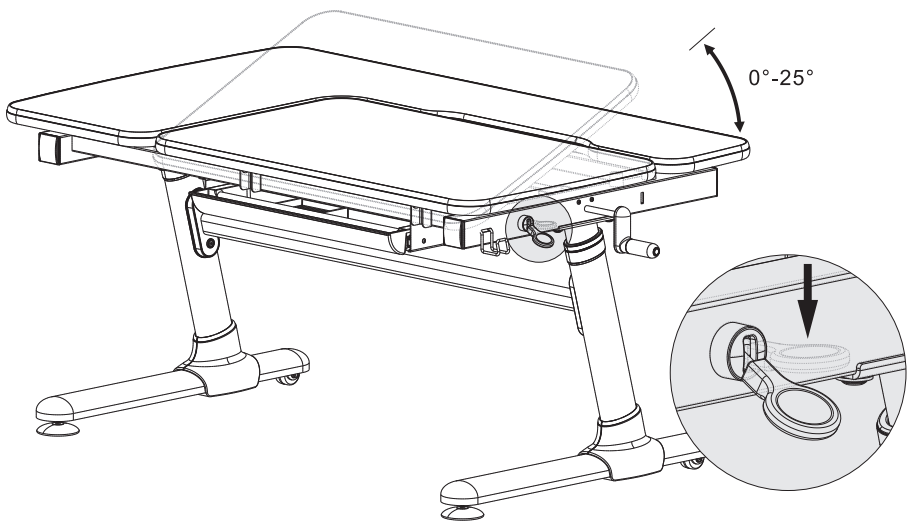

10

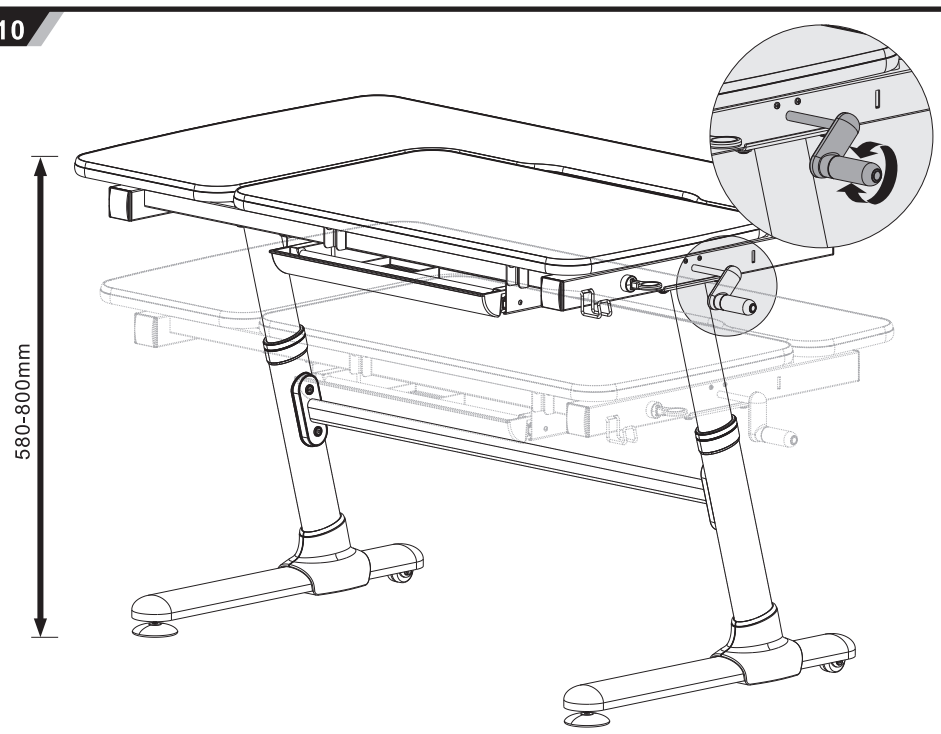
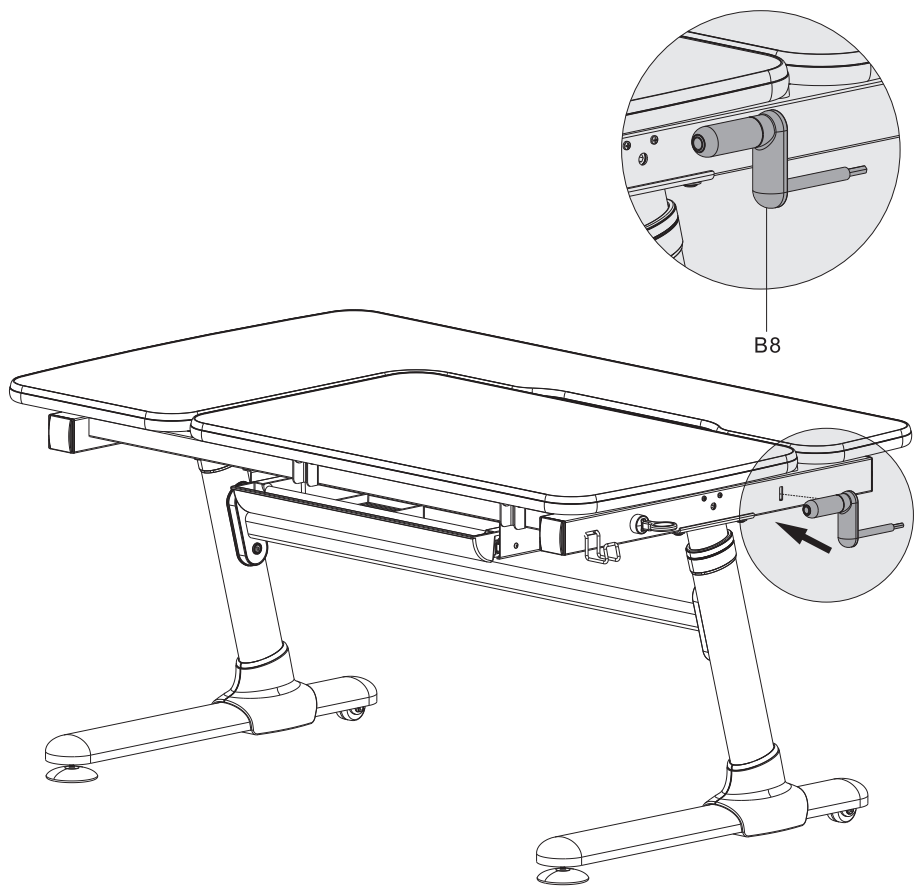
11